radwag.com

WLC 6/A2/C/2 Precision Balance

More information on the website
radwag.com/en/info,w1,WP7

WLC 6/A2/C/2 Precision Balance

The drawings, photos and graphics used are for illustrative purposes only.

Functions

- Plus/Minus Control
- Percent Weighing
- Totalizing
- Parts counting
- Internal battery
- Peak hold
- Newton unit measurement

Datasheet

	WLC 6/A2/C/2 Precision Balance
Metrological parameters	
Maximum capacity [Max]	6 kg
Minimum load	5 g
Readability [d]	0,1 g
Verification scale interval [e]	1 g
Tare range	-6 kg
Repeatability	0,15 g
Linearity	±0,2 g
Stabilization time	3 s
Adjustment	internal (automatic)
OIML Class	II
Physical parameters	
Leveling system	manual
Display	LCD (backlit)
Protection class	IP 43
Weighing pan dimensions	195×195 mm
Packaging dimensions	470×380×336 mm
Net weight	3,6 kg
Gross weight	5,1 kg
Communication interface	
Communication interface	2×RS232, USB-A, USB-B
Electrical parameters	
Power supply	Adapter: 100 – 240V AC 50/60Hz 0,6A; 12V DC 1,2A Balance: 10 – 15VDC 0,6A max
Operation time on batteries	15 h (average time)
Environmental conditions	
Operating temperature	+15 ÷ +30 °C
Relative humidity	10% ÷ 85% RH no condensation

Repeatability is expressed as a standard deviation from 10 weighing cycles. Stabilization time depends on the ambient conditions and the dynamics of weighing pan loading; specified for FAST profile.

Accessories

Antivibration Tables
RS 232 cables (scale - printer)
Cigarette lighter receptacle power supply cables
Density determination KIT
RS 232 – Ethernet Converter
Displays
AP2-1 Current Loop Unit
RS 232, RS 485 cables
Protective cover for balances
Under-Pan Weighing Rack
RS 232 – RS 485 Converter

Software

RAD-KEY
R-LAB
LabVIEW Driver
Scales Editor 2.1

Device dimensions

WLC 6/A2/C/2 Precision Balance

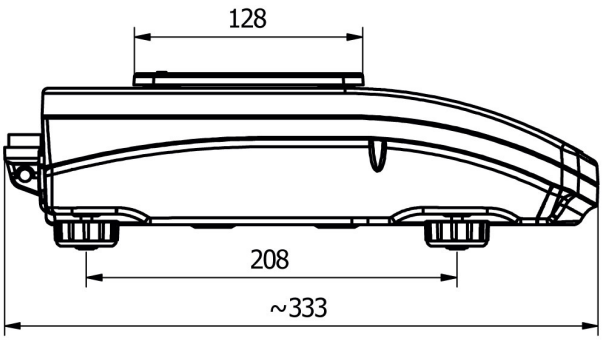

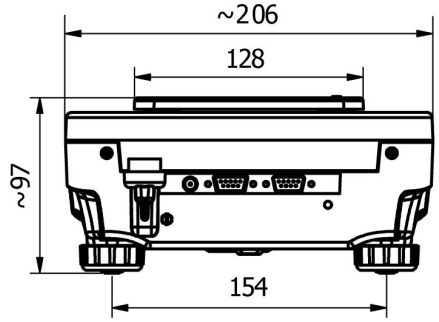

WLC A1

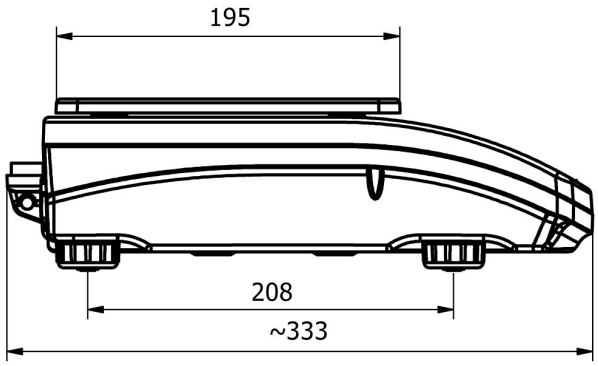

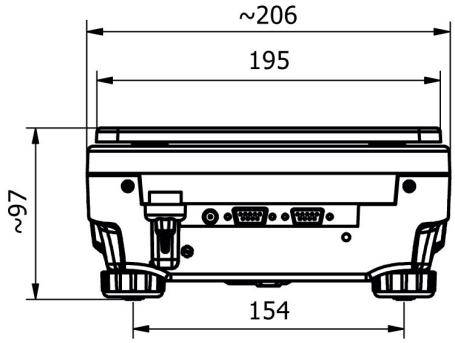

WLC A2